DO NOT SCALE THE DRAWING

ALL DIMENSIONS ARE IN mm

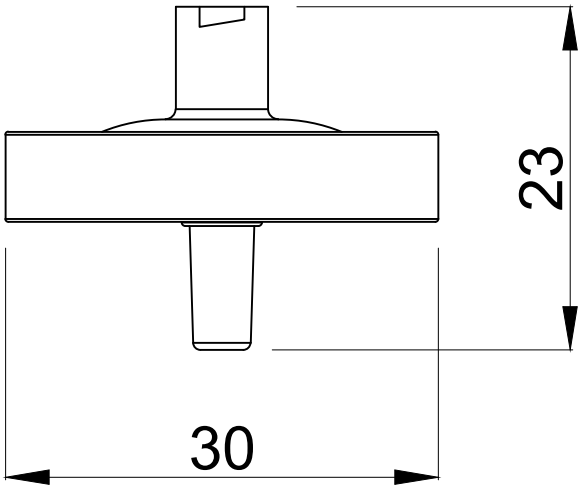

PART	QUANTITY	REF. NO.	DESCRIPTION	MATERIAL	FINISHED SIZE	HARDNESS	REMARK

REV. NO.	ECN. NO.	DATE	DESCRIPTION	REV. NO.	ECN. NO.	DATE	DESCRIPTION

mdi Advanced Microdevices Pvt. Ltd. 20, 21, Industrial Area , Ambala Cantt., 133006

25mm Inline Filter with female luer lock inlet & male luer slip outlet

REV. NO.

FORMAT NO. 5

SCALE	PROJ.		DATE	SIGN.
		DRAWN		
		DESIGNED		
		CHECKED		
		APPROVED		

TOLERANCE UNLESS SPECIFIED

	1Dec.Pl	2Dec.Pl	3Dec.Pl	4Dec.Pl
C	A±0.100	A±0.050	A±0.025	A±0.010
T	A±0.050	A±0.025	A±0.010	A±0.000
S				
ANGLE	A±2Â°	A±2Â°	A±2Â°	A±2Â°

TOOL No.	COMP. No.	STORE No.	SHEET 1 OF 1